Hercules/ 1580:

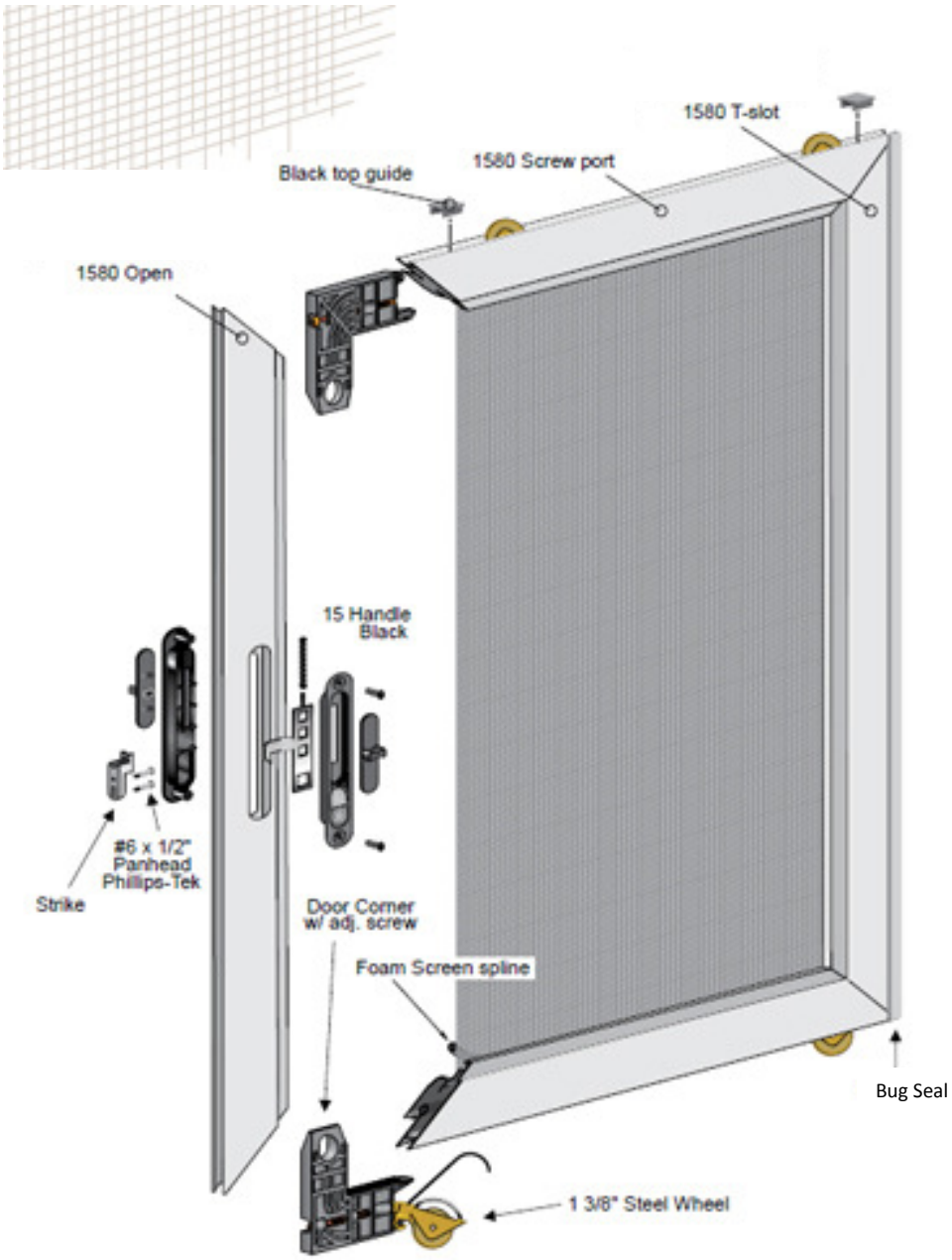

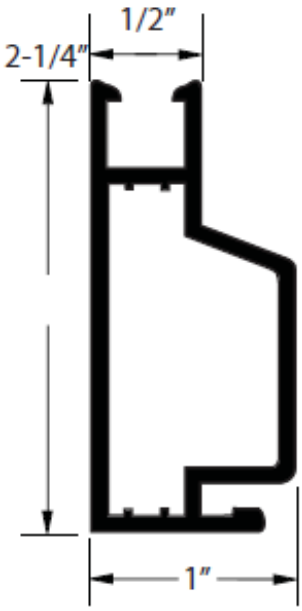
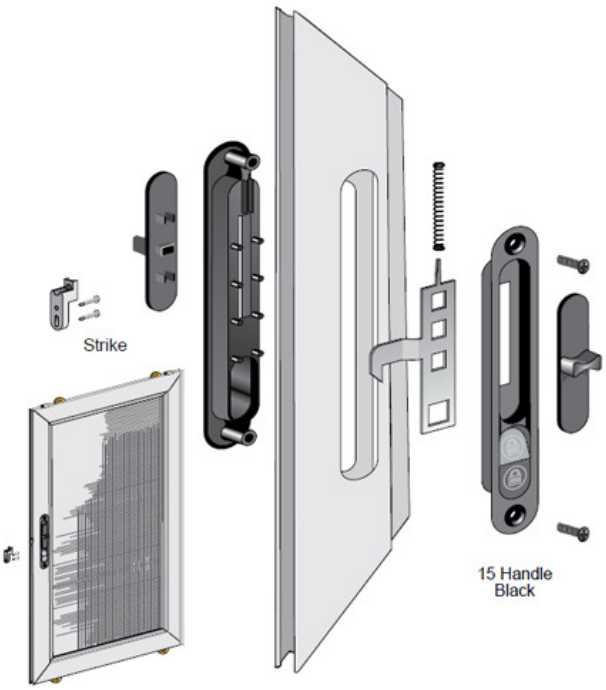
Wall Thickness is .060"